SAS380 Nexus

Structural Grid Ceiling Solution for Data Centres

SAS INTERNATIONAL
EST. 1968

Introduction

SAS380 Nexus is a high performance structural load ceiling solution specifically designed to provide direct support for cable trays and other large, heavy utilities in a data hall.

The heavy duty aluminium grid is quick and easy to install and can be used in multiple configurations, making it ideal for data centre specifications.

SAS has a renowned reputation for quality and manufacturing excellence, spanning more than 50 years. SAS380's combination of structural grid and robust durable ceiling tiles creates a strong yet simple assembly lasting decades to come.

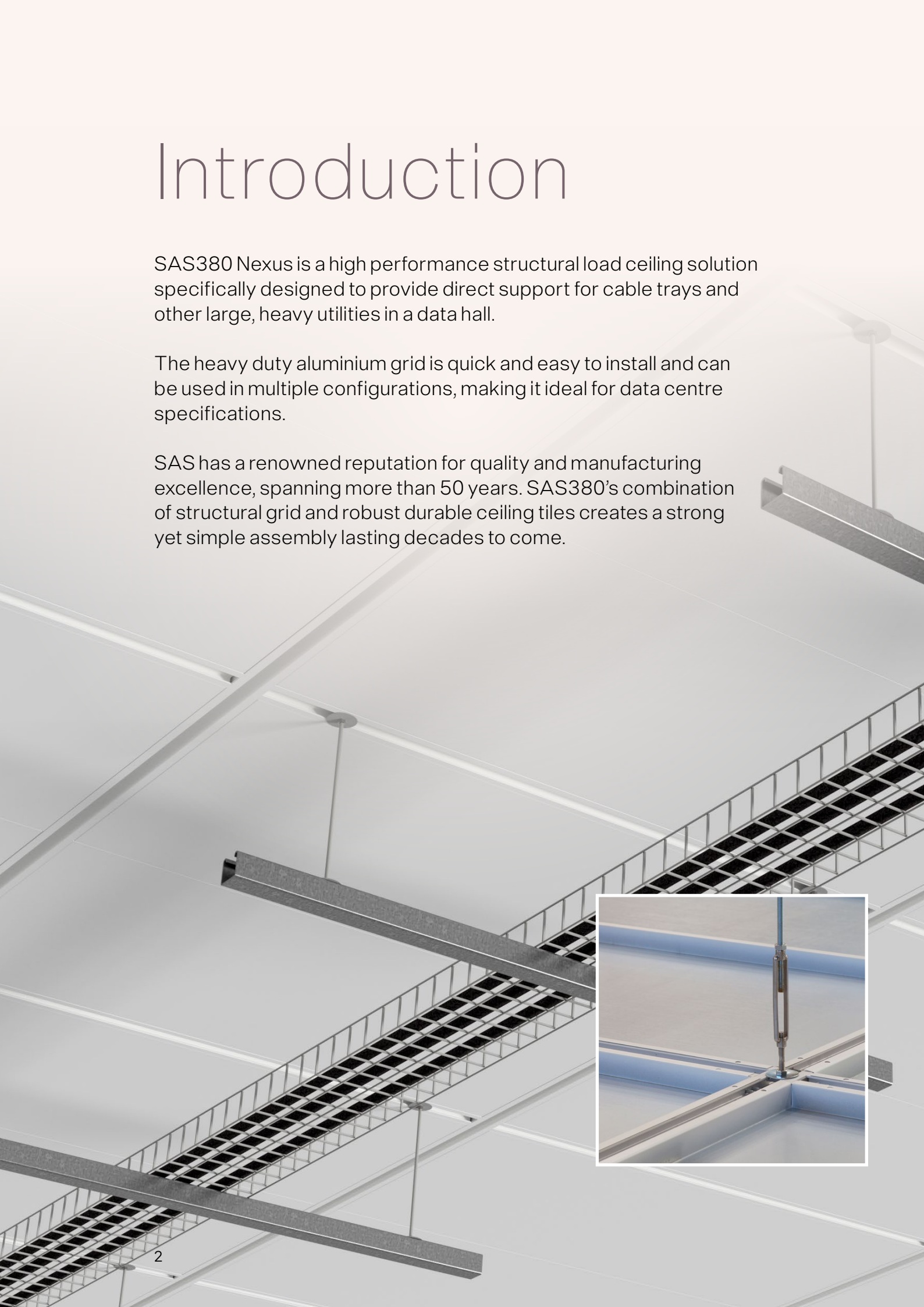

ADVANTAGES

- Fast and flexible installation
- Capable of supporting higher loads than other structural grid systems
- Tested for lateral stability
- Multiple grid configurations for added flexibility
- Requires less grid than other systems thanks to innovative design
- Continuous channel feature suitable for use with standard Unistrut fixings
- Services can be supported below or upon grid depending on requirements
- Safety factor of 2 for all connections
- BIM Support Available
- Service life of 40 years plus

System Perspective View

1. M10 Threaded Rod
2. M10 Turnbuckle
3. M10 Engineers Stud
4. M10 Unistrut Channel Nut PNP10
5. M10 Nut & M10x40x1.5mm Washer (by others)
6. Aluminium Main Profile 3600mm, RAL 9010
7. Aluminium Cross Noggin 1150mm, RAL 9010
8. DC90s – Removable Angle Splice (LH/RH)
9. DC180 – Straight Splice
10. Tek Screw 4.2mm x 13 Waferhead (by others)
11. Plain Infill Tile
12. Perimeter Profile
13. Gasket Seal

Tile Hold Down Clip (optional)

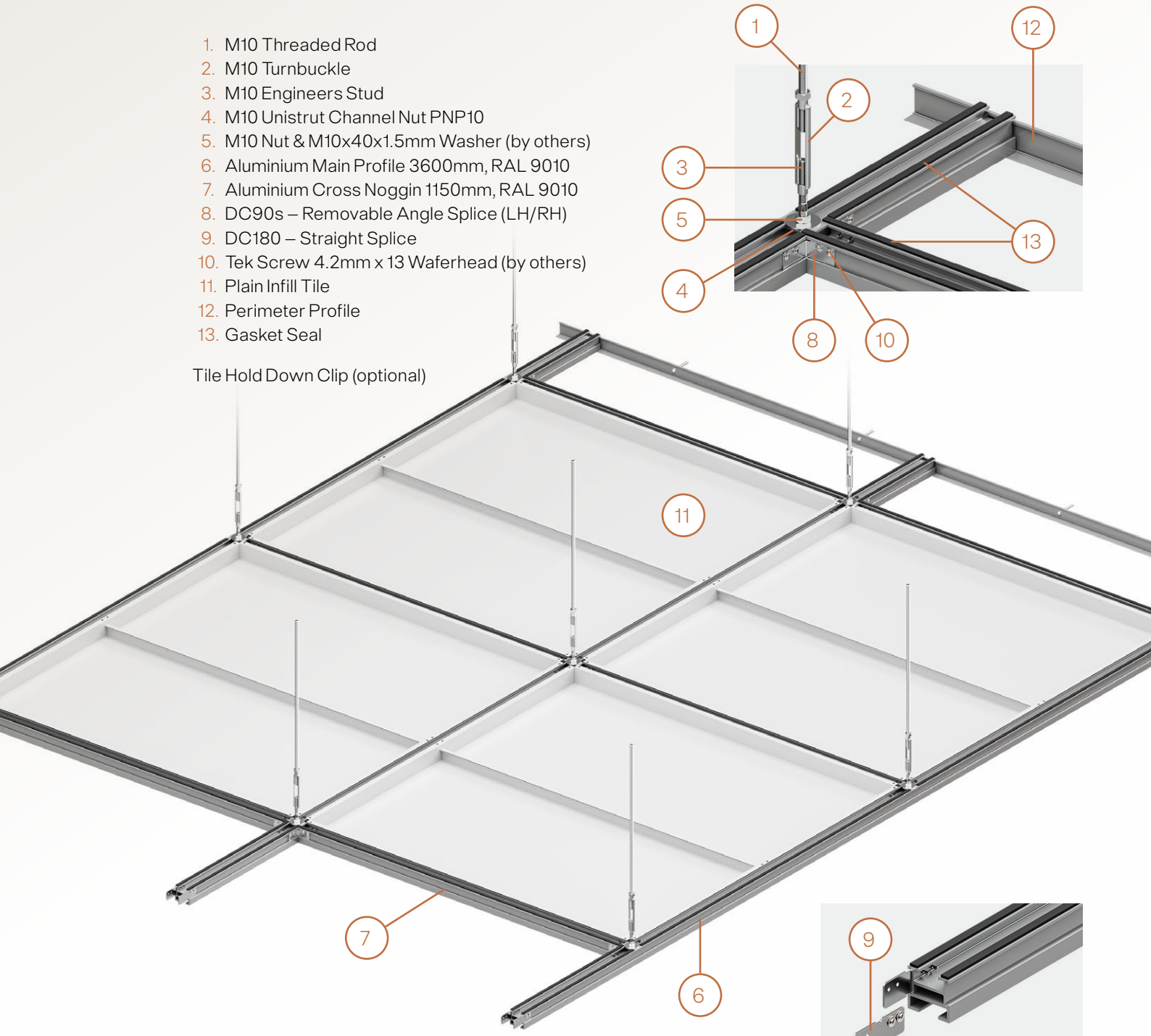

- Factory engineered heavy duty aluminium ceiling grid with continuous channel slot compatible for use with standard Unistrut fixings.
- Simple grid arrangement consisting of structural main runners and cross tees installed using heavy duty splice connectors.
- Load Performance Criteria:
  - Safe working point load of 2kN
  - Safe working unform load of 2.75kN/m^2

Grid Specification

SAS380 Nexus grid is comprised of main runners and structural cross tees assembled using heavy duty splice connectors which are located in a specially designed keyway feature.

Nexus profile is designed to use a M10 turnbuckle assembly.

The continuous channel slot is compatible for use with standard Unistrut fixings.

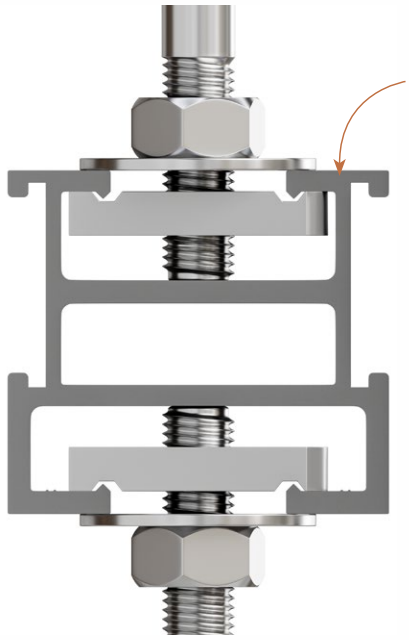

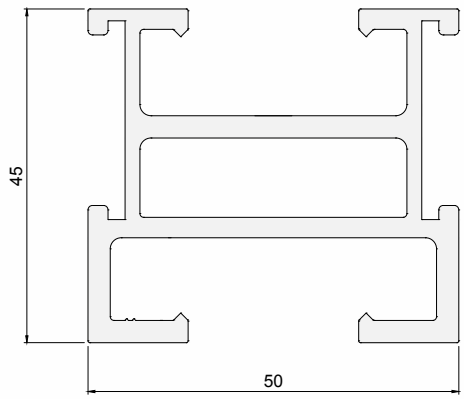

Scale 1:1

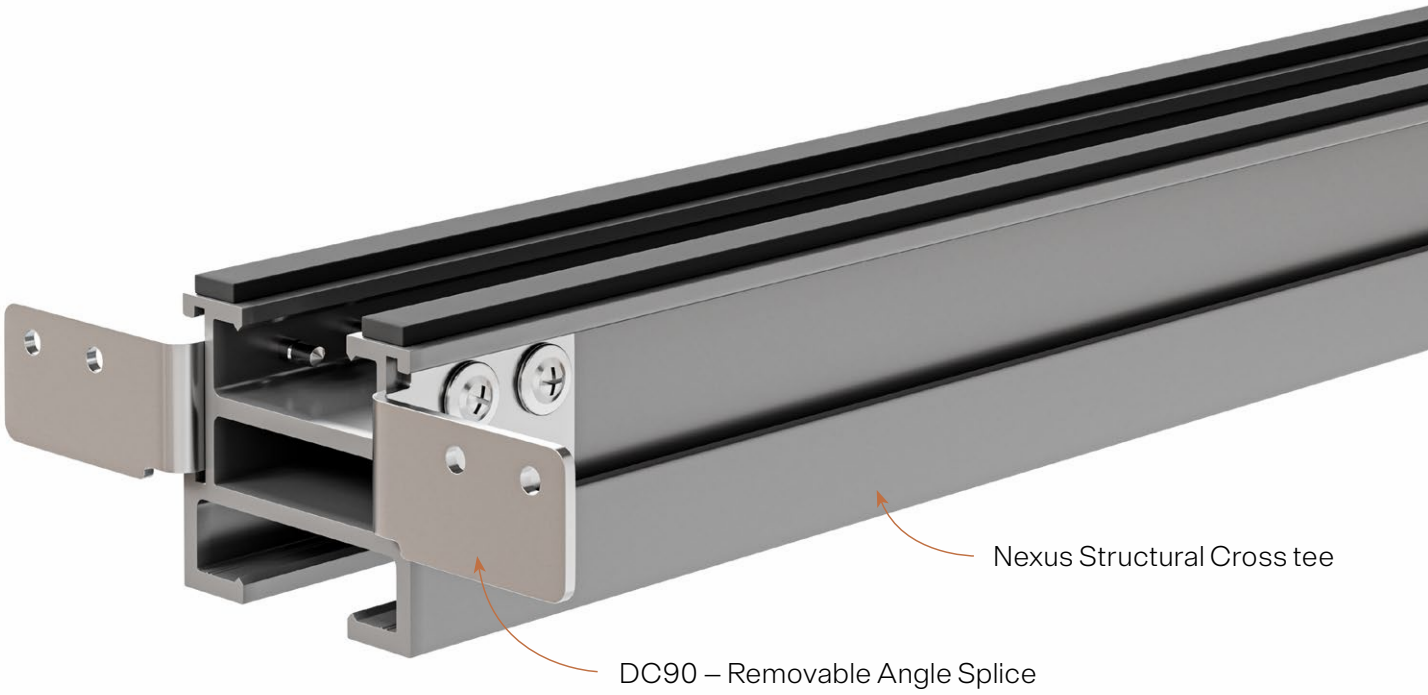

Grid Specification

Main Runner Splice Detail

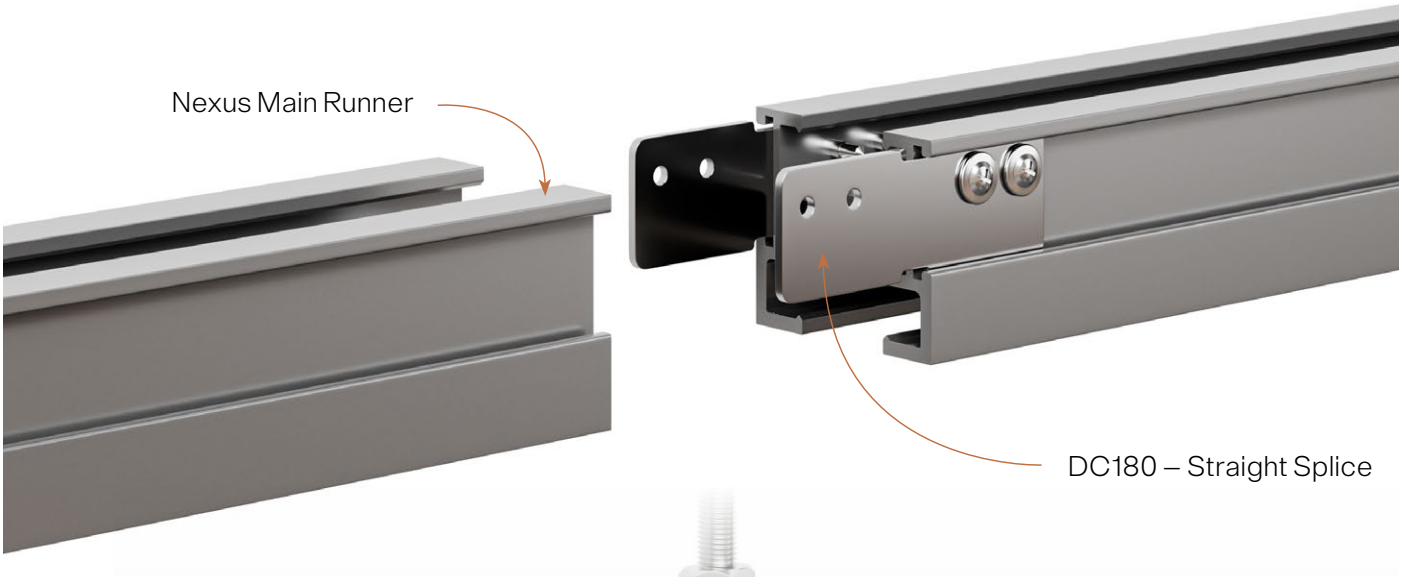

Typical Suspension Detail

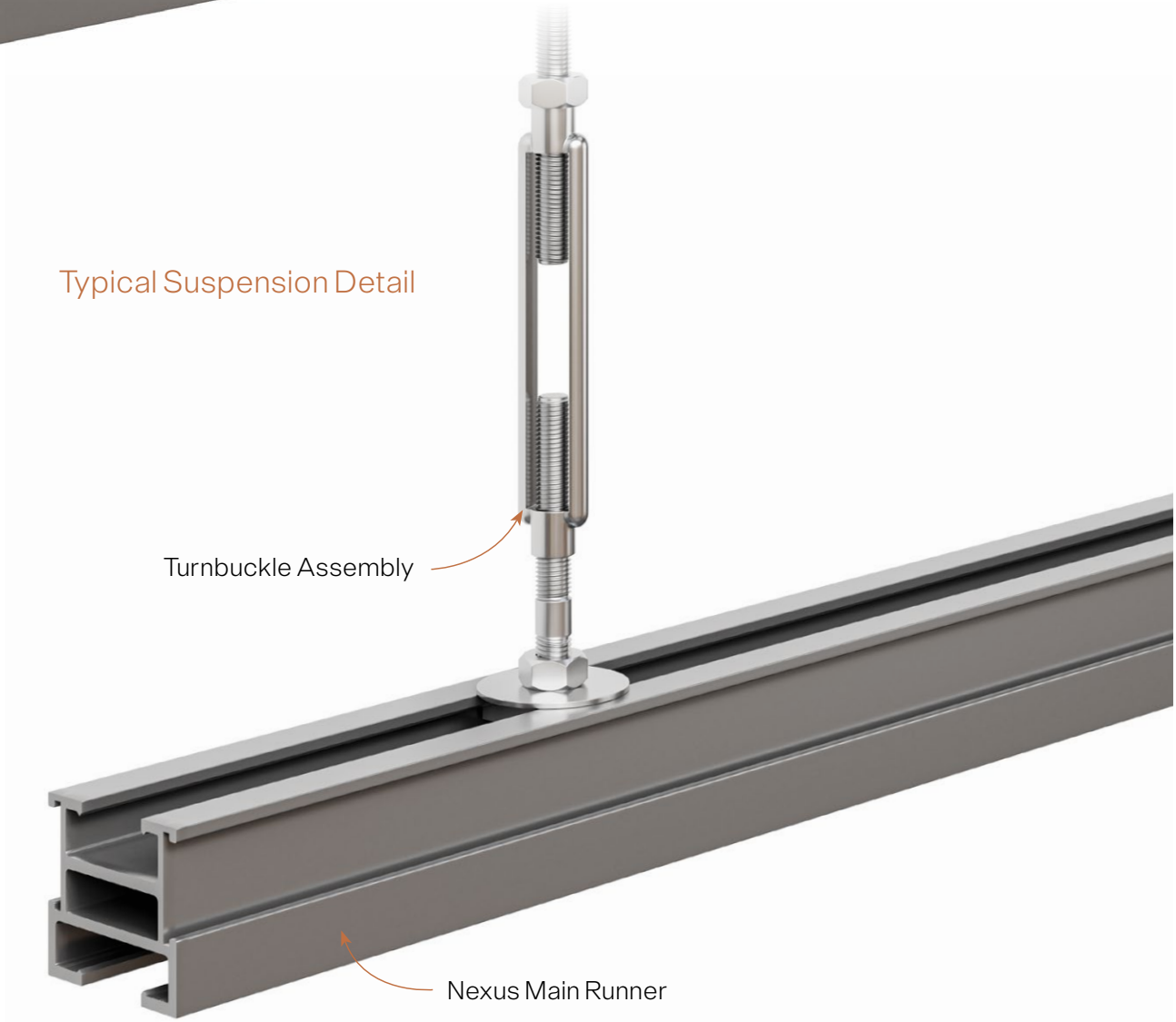

Structural Grid Node Intersection

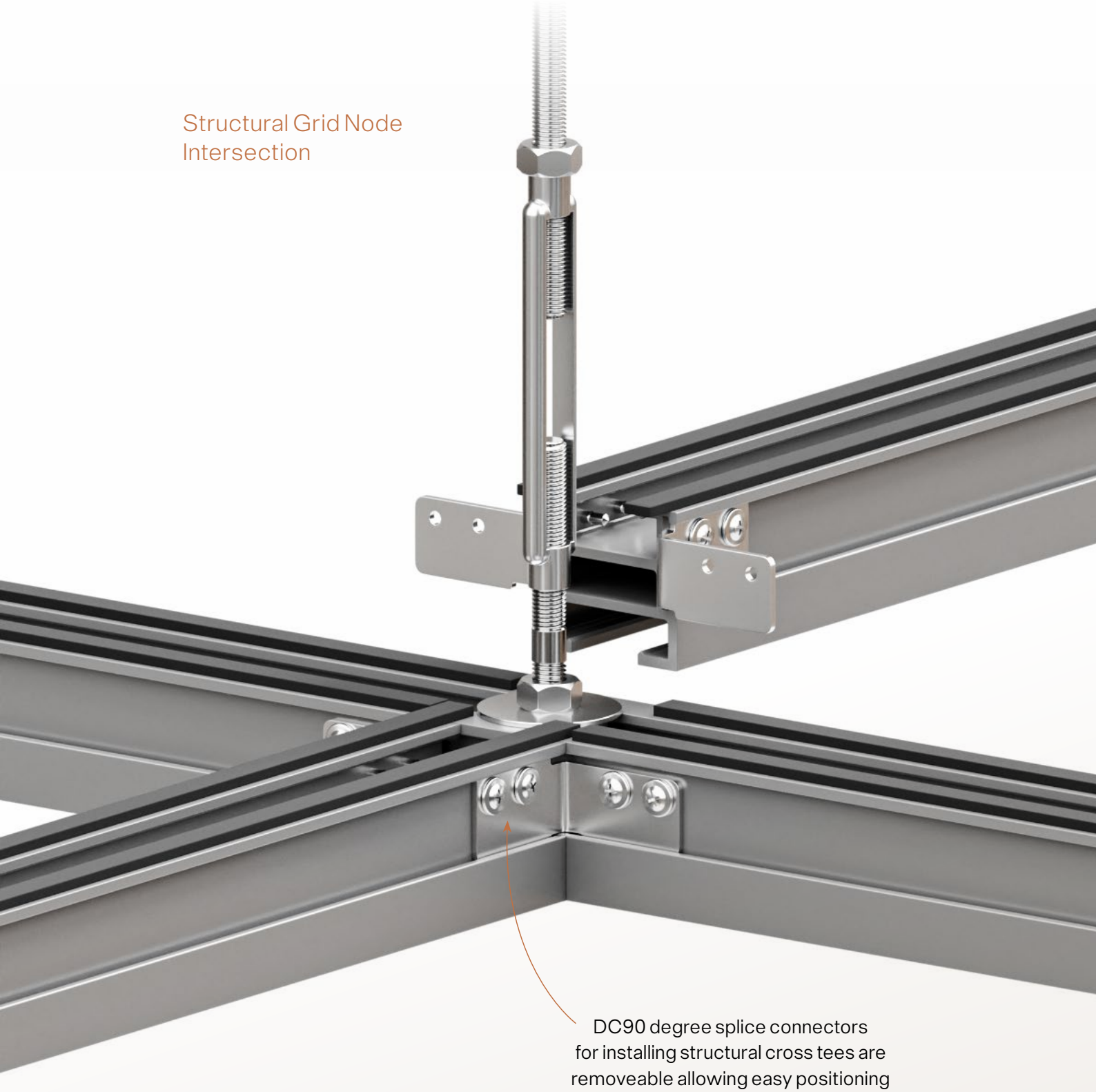

DC90 degree splice connectors for installing structural cross tees are removeable allowing easy positioning and in-situ adjustment.

Structural Performance

SYSTEM PERFORMANCE CRITERIA

Hanging Method	Grid Load Performance (with structural connections and 1.2 x 1.2m centres) *1*	Connection to Bottom Slot *2*	Connector to Grid
Safe Working Point Load *3*	2.0kN @ 10mm deflection	3.6kN	
Safe Working Uniform Load *3*	2.75kN/m^2	N/A	
Ultimate Point Load	3.6kN	7.2kN	

1 Load can be placed anywhere on the ceiling including the noggin. Mid-span maximum point load no less than 1.2m apart in any direction
2 Load support no further than 100mm from rod connector
3 Factor of Safety of 2 applied

MID-SPAN POINT LOAD

Maximum mid-span point load for continuous main runner or cross noggin with adjacent 1.2m spans loaded. For section properties, please see Technical Datasheet.

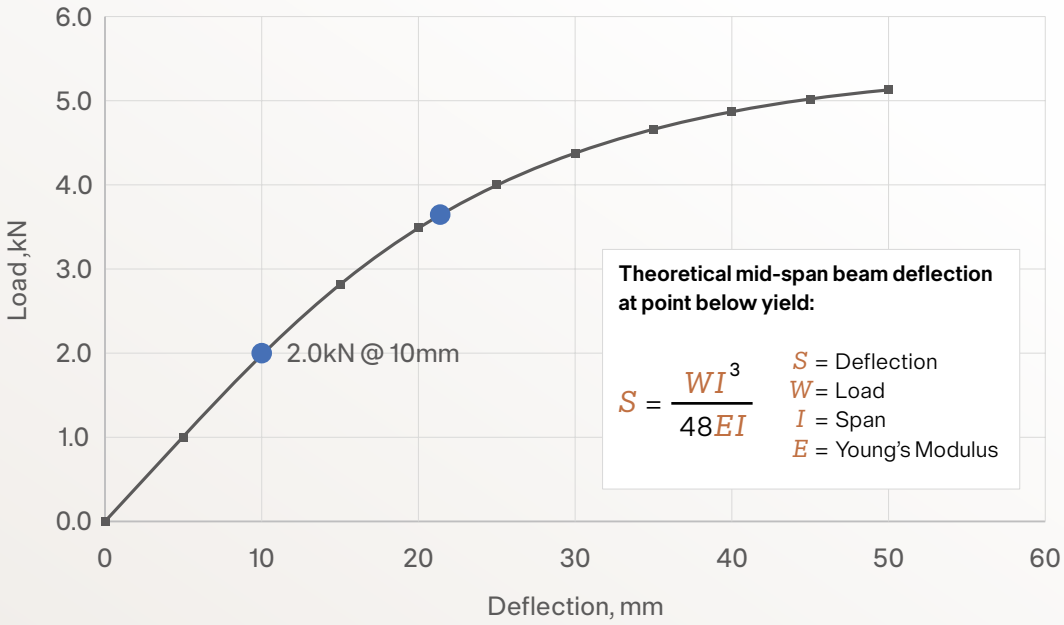

LATERAL STABILITY

For a 1.2m x 1.2m grid, the following maximum lateral loads could be applied based on a Length divided by 200 (L/200) mid-span deflection. It should be noted, the system resists larger values if the lateral restraint is located close to the point load. Further information can be provided upon request.

Lateral Resistance	Maximum Lateral Load @ L/200
Every other hanger position (2.4m max)	1.0kN
Every third hanger position (3.6m max)	0.5kN

SPAN TABLE

For use when a member span and spacing greater than 1200mm is used

Member Span and Spacing, Dim 'X'	1200mm	1500mm	1800mm
Maximum Allowable Uniform Area Load *1*	2.75kN/m^2	1.4kN/m^2	0.68kN/m^2
Maximum Mid-Span Point Load *1*	2.0kN	1.5kN	0.92kN
Maximum Static Point Load *2*	2.0kN	2.0kN	2.0kN

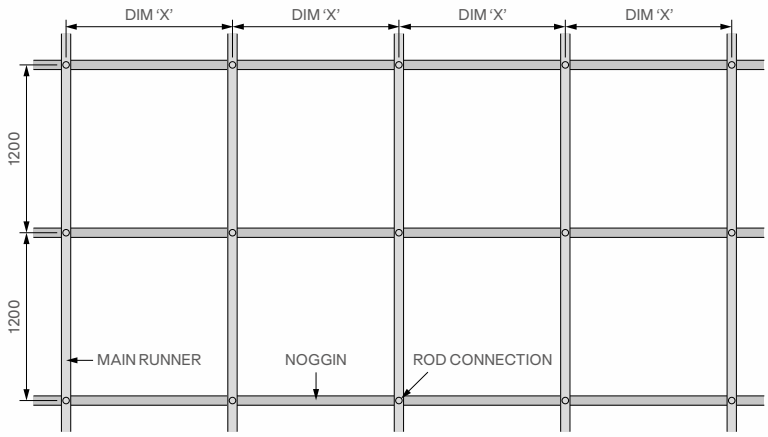

1 Values marked with an asterisk are governed by a deflection limit of L/100

2 Load when applied to bottom slot for spans >1500mm is dependent on relative position of hanger

SAS380 Nexus Profile & Perimeter Options

Nexus is designed to allow fixed or floating perimeter options. Where required, tiles can be cut on site for improved installation by using standard SAS perimeter profiles.

Fixed Perimeter

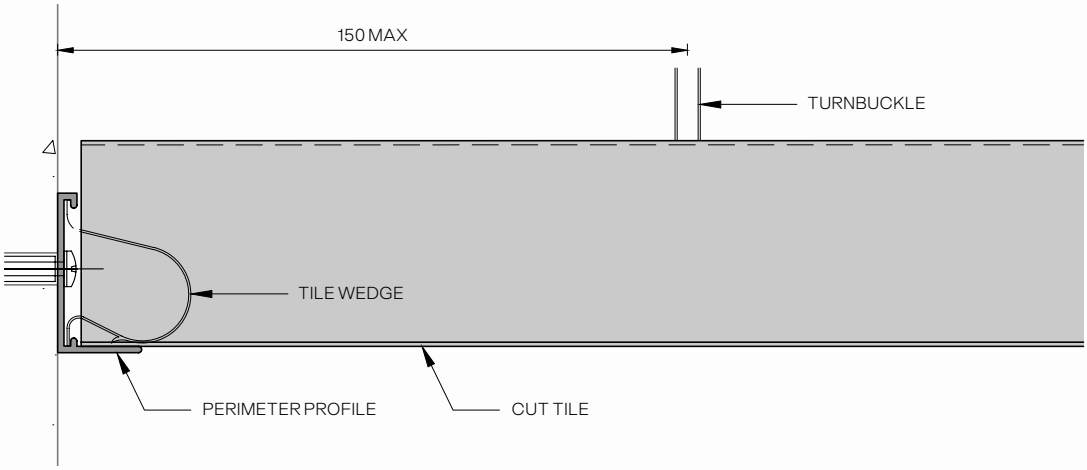

The Nexus profile can be used with support connections when installing a floating perimeter and is easily cut on site to suit conditions.

Wall angles can be used to improve perimeter detailing.

Floating Perimeter

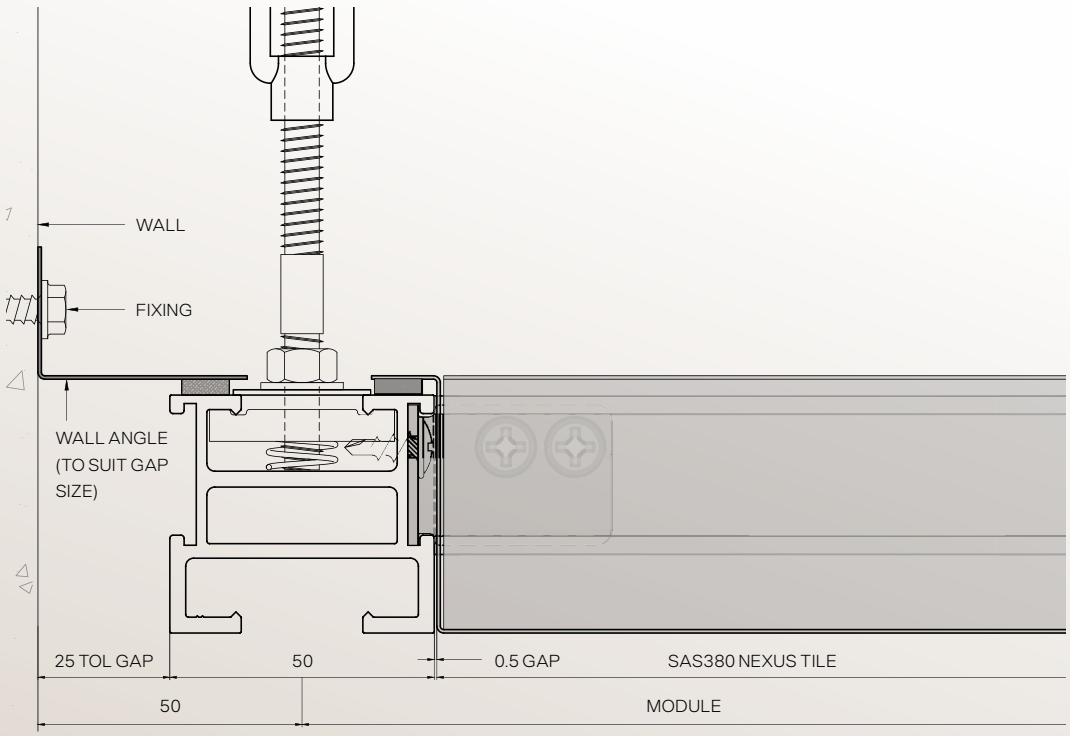

Ceiling Module Sizes & Installation Guidance

SYSTEM WEIGHT

Module Size	Tile Included	Weight
1200x1200mm	No	3.0kg/m^2
1200x600mm	No	4.5kg/m^2
1200x1200mm	Yes (steel)	10.0kg/m^2
1200x600mm	Yes (steel)	11.5kg/m^2

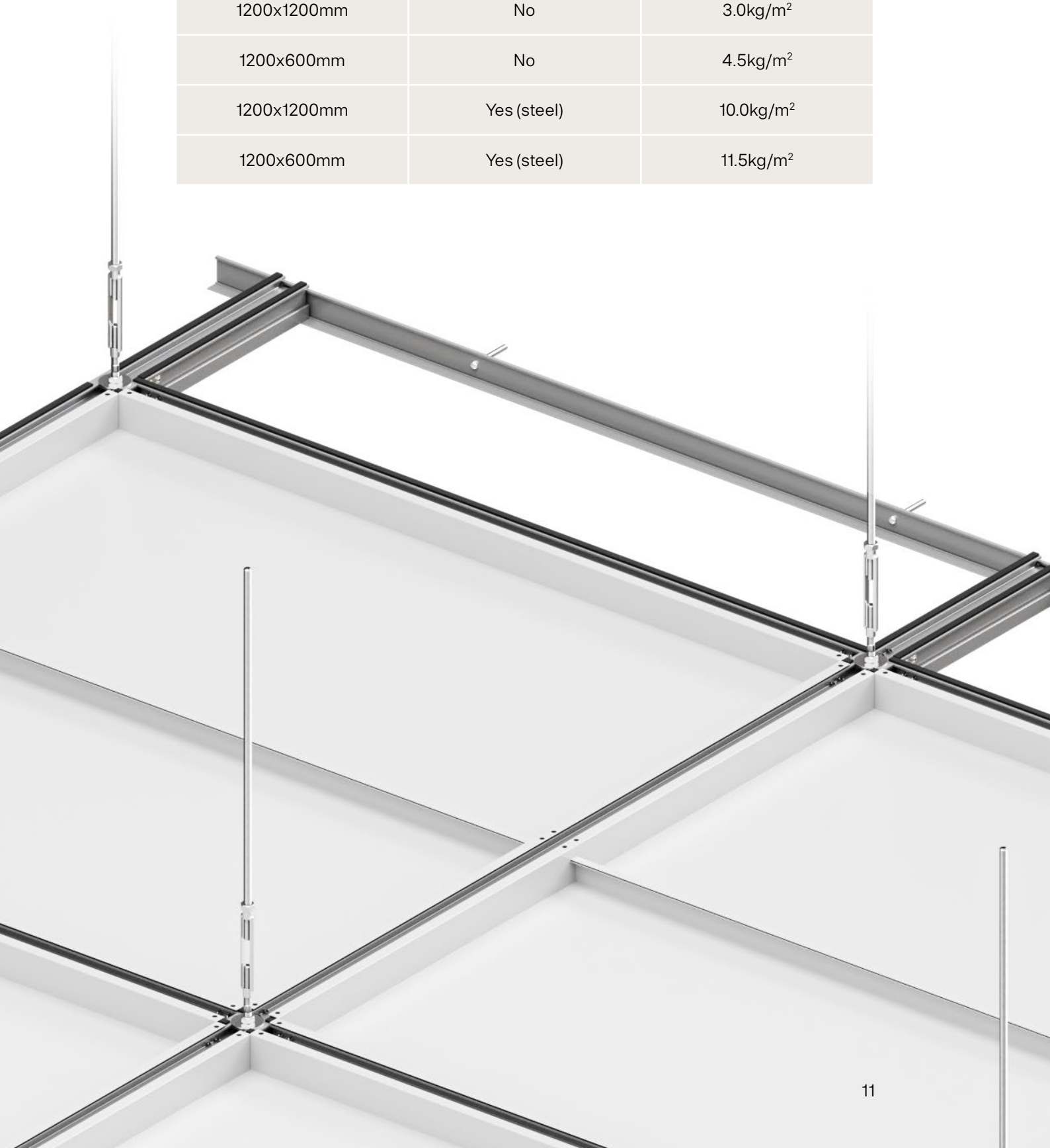

Step 1

Threaded drop rods and turnbuckle assemblies are installed to building structure using suitable fixings.

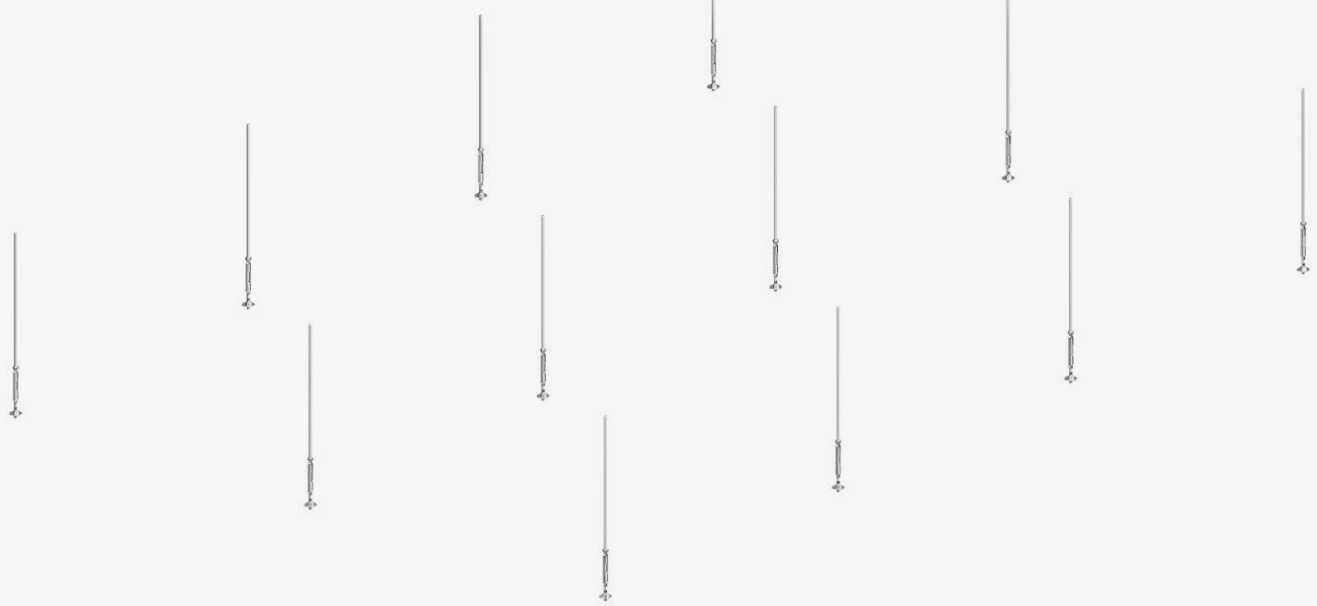

Step 2

Main runners are installed at 1200mm centres and are fixed together using straight splice connectors.

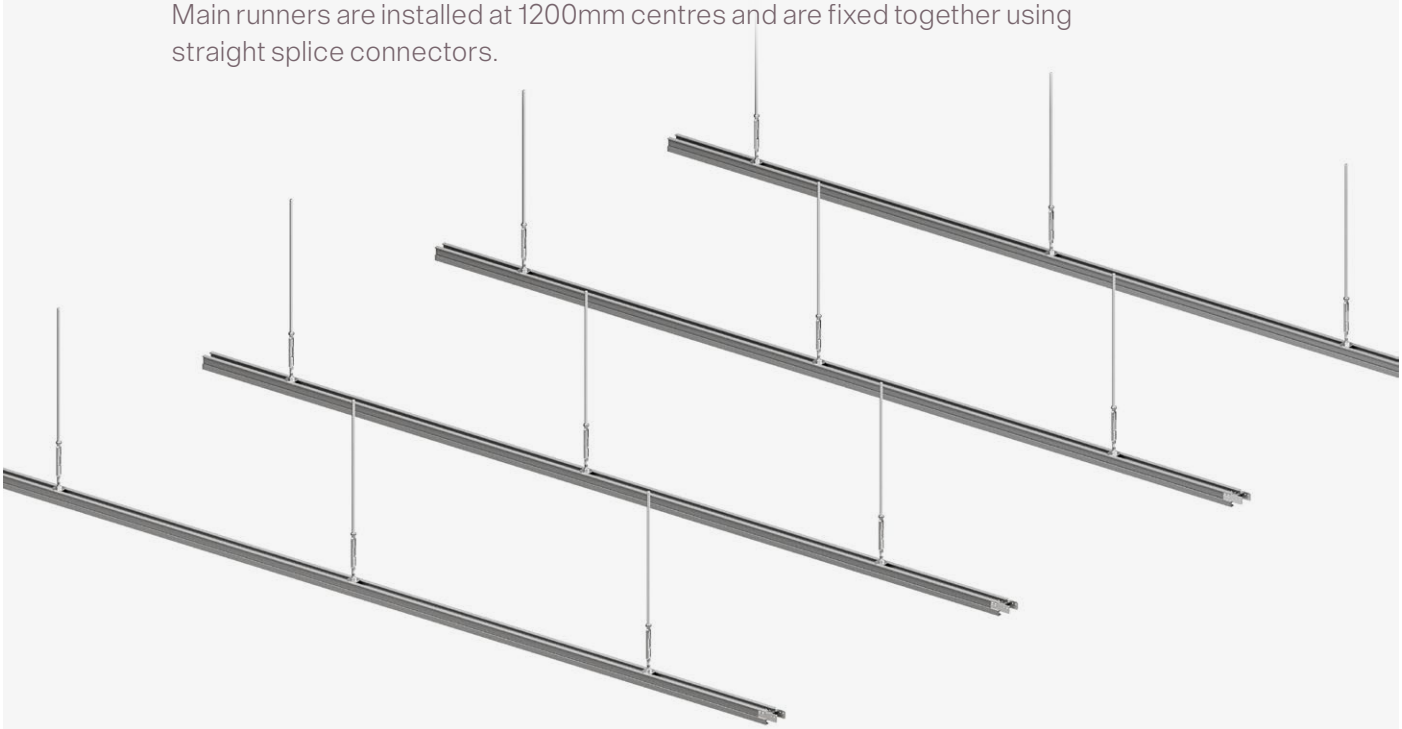

Step 3

Structural cross tees are installed along main runners at 1200mm centres using removeable angle splice connectors which locate into the specially designed keyway of the Nexus profile. Cross tees can be slid and adjusted into position prior to fixing.

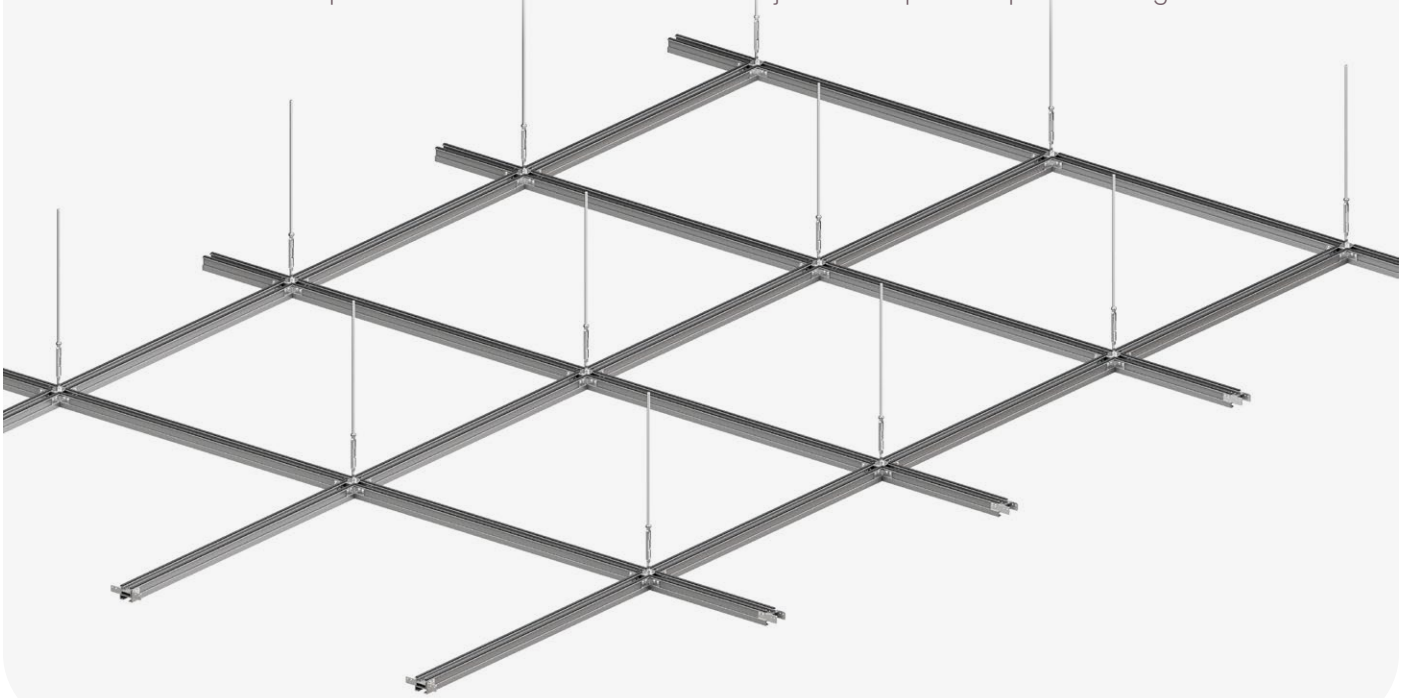

Step 4

Infill tiles are installed into the Nexus grid.

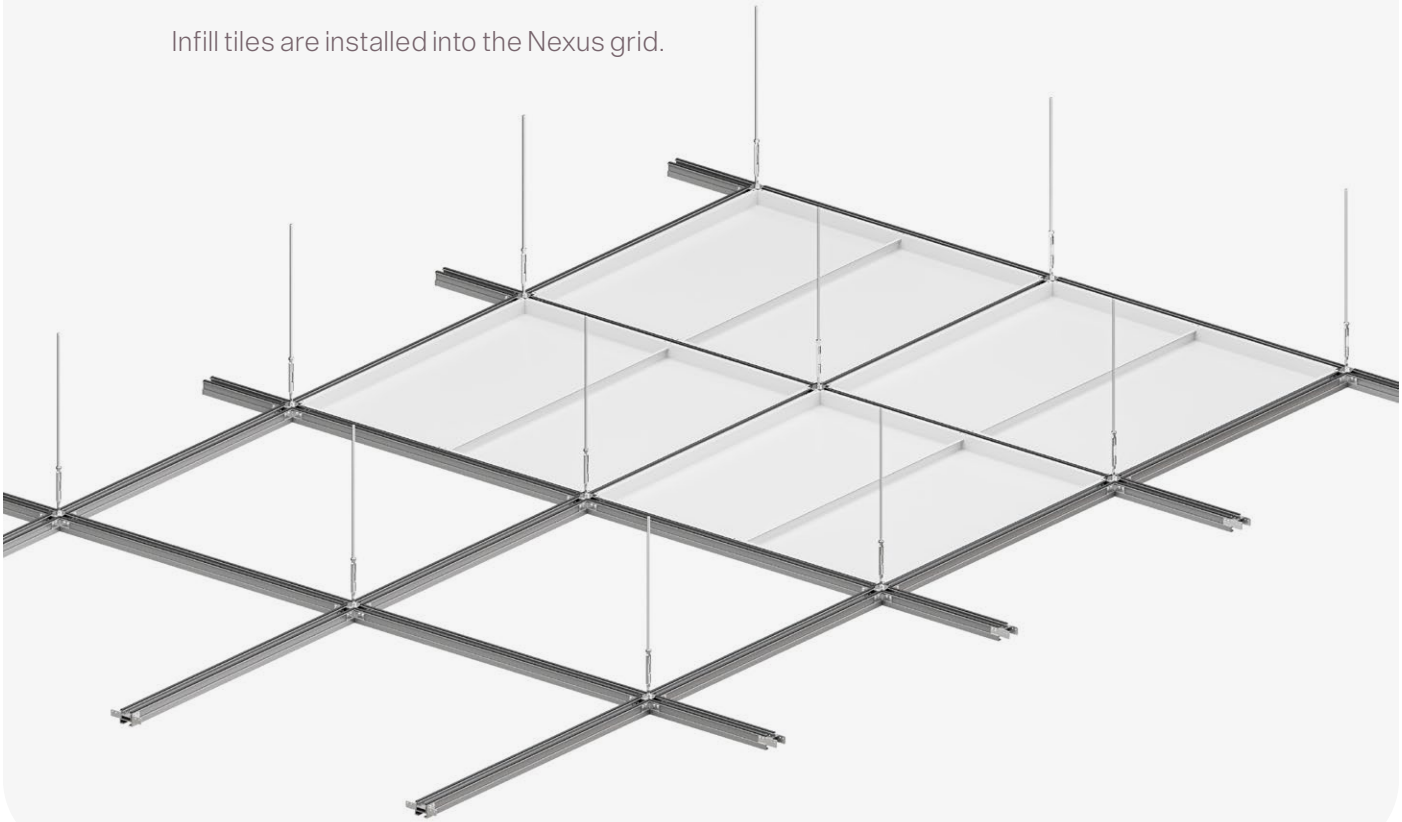

Sustainability & Material Health

CRADLE TO CRADLE CERTIFIED

Nexus is the first structural load grid system in the world that achieves full certification under the Bronze Level Cradle to Cradle certified Level 4 accreditation. The most advanced global sustainability certification for verifying materials and products that are safe, circular, and responsibly made.

For more information, please scan the QR code

SAS HORIZON

Nexus is now included in the SAS International Horizon project to reduce the embodied carbon of our products. Using renewable energy-powered electric arc furnaces, the embodied carbon of our standard system is lower by 58% and now contains over 90% recycled steel.

SAS Nexus
Lay-In Plain Steel Tile

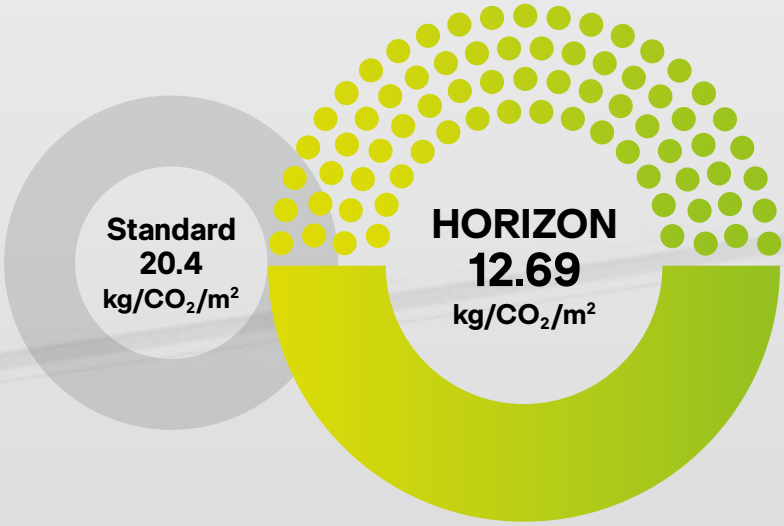

Sustainability & Material Health

MATERIAL HEALTH
VOCs: <0.5 µg/m^3 (tested in accordance with Indoor Comfort Gold and California Department of public health standards)
Formaldehide Class: E1 accordance with BS EN13964:2014
REACH / LBC Red List: Product contains no substances on te authorisation, restriction or candidate list found on the current REACH SYHC or Red List to 0.1% or 100ppm
Cradle to Cradle material Health Certification: Yes (PPC finish)

SUSTAINABILITY
Circularity: Product suitable for reuse, refurbishment and repurposing
Install and Disassembly: Installation and disassembly guides available

SAS INTERNATIONAL
EST. 1968

INTERNATIONAL & UK sasint.co.uk / **IRE** sasint.ie /
FR sasint.fr / **MENA** sasint.me / **AUS** sasint.au.com /
USA sasint.us

full scope
CERTIFIED
cradle to cradle
silver version 5.0
C2CCERTIFIED.ORG